MAIN

ALL MEASUREMENTS ARE IN MILLIMETRES
AND ARE THE MAXIMUM UNLESS NOTED

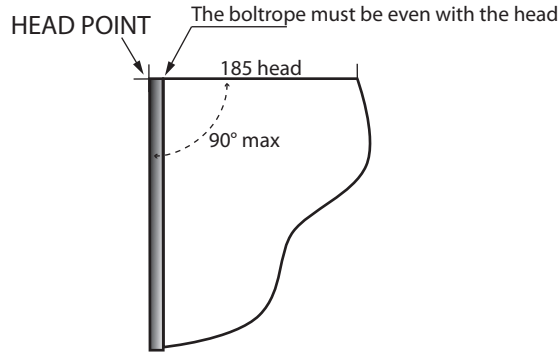

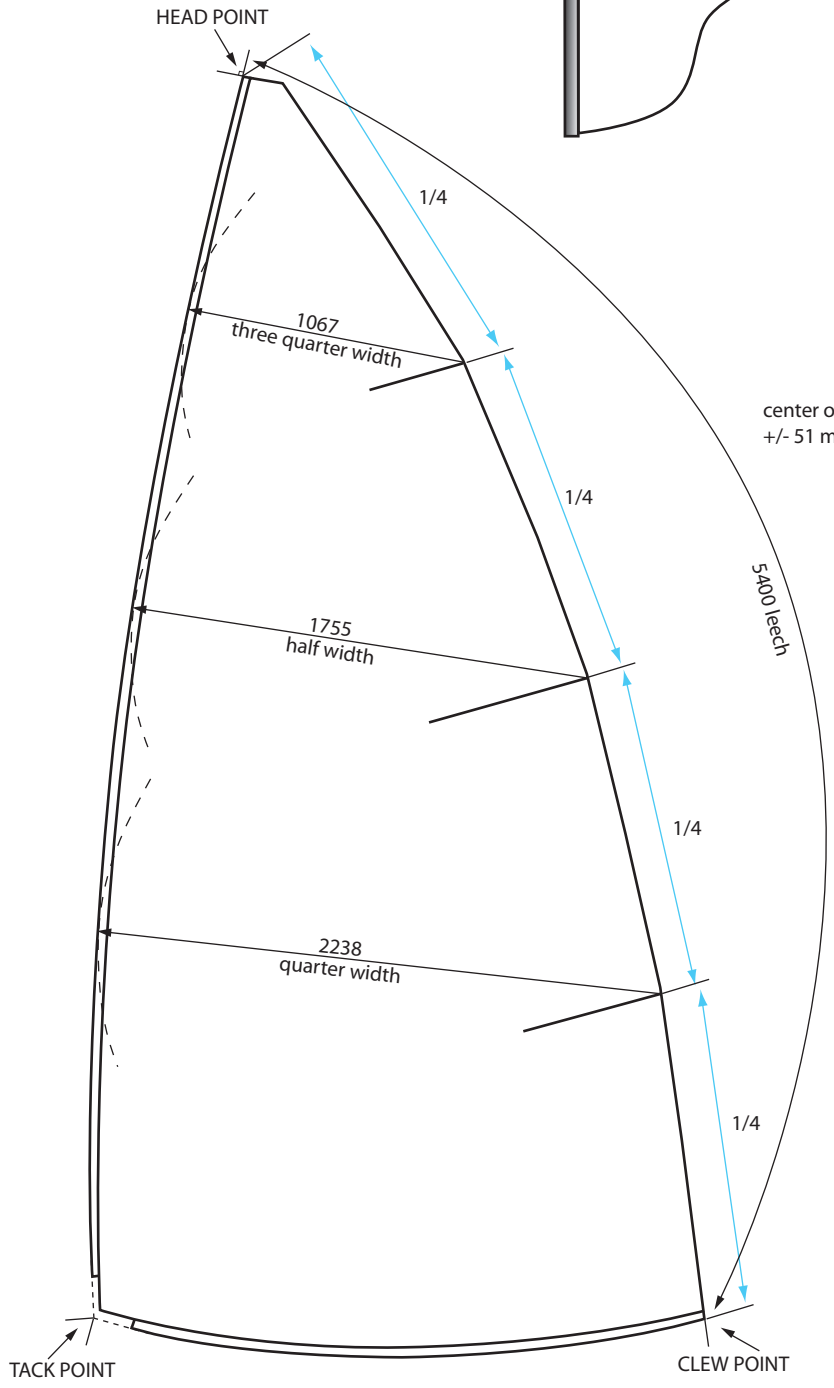

center of batten pockets to be
+/- 51 mm from quarters

battens length
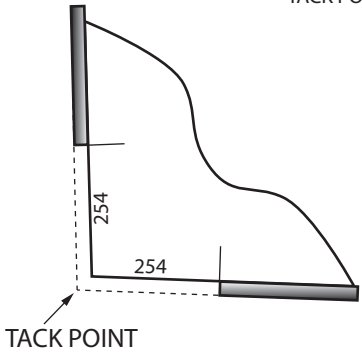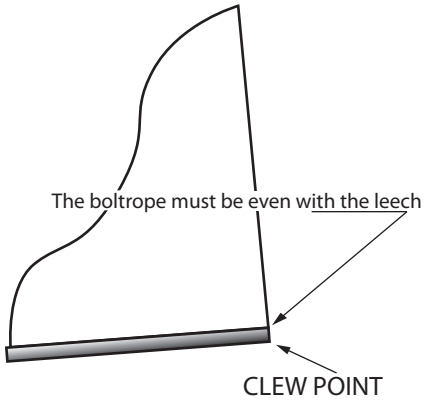
top	457 mm
central	686 mm
lower	610 mm